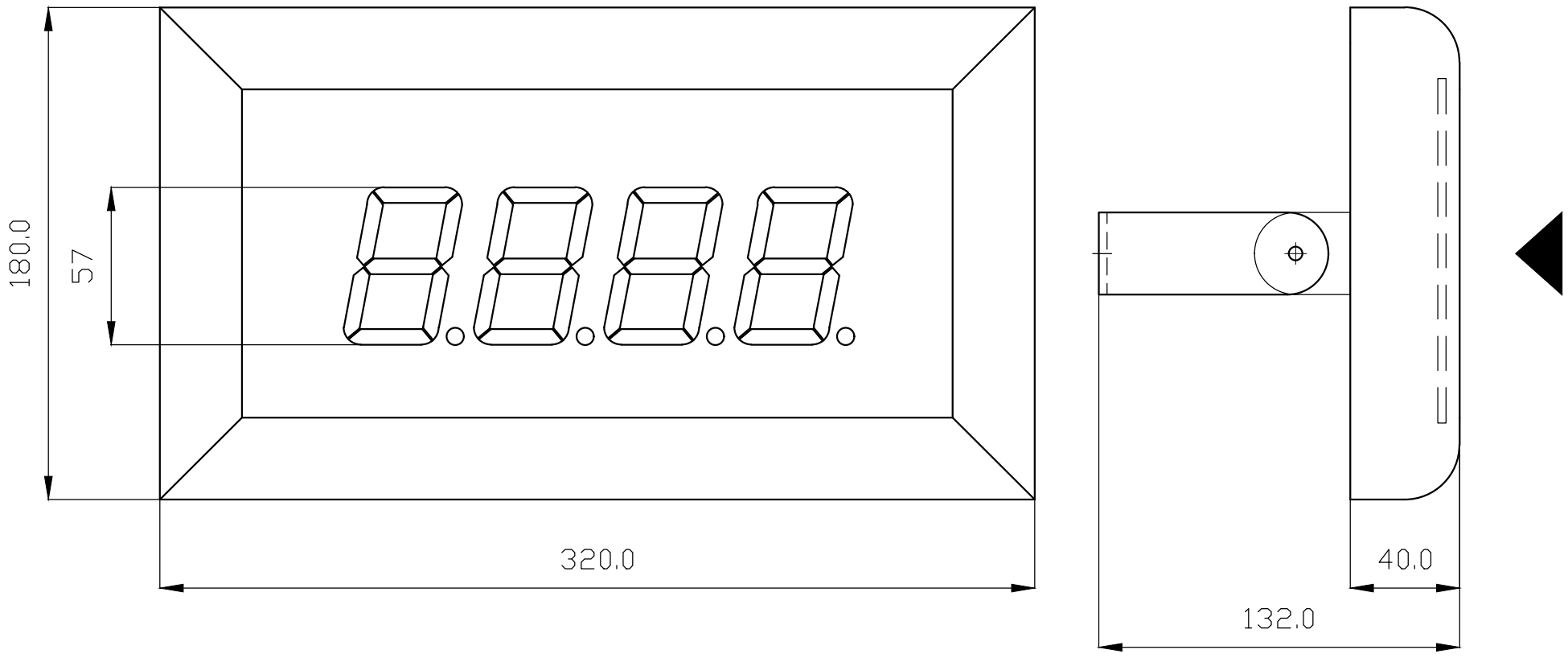
180.0
57
320.0
40.0
132.0